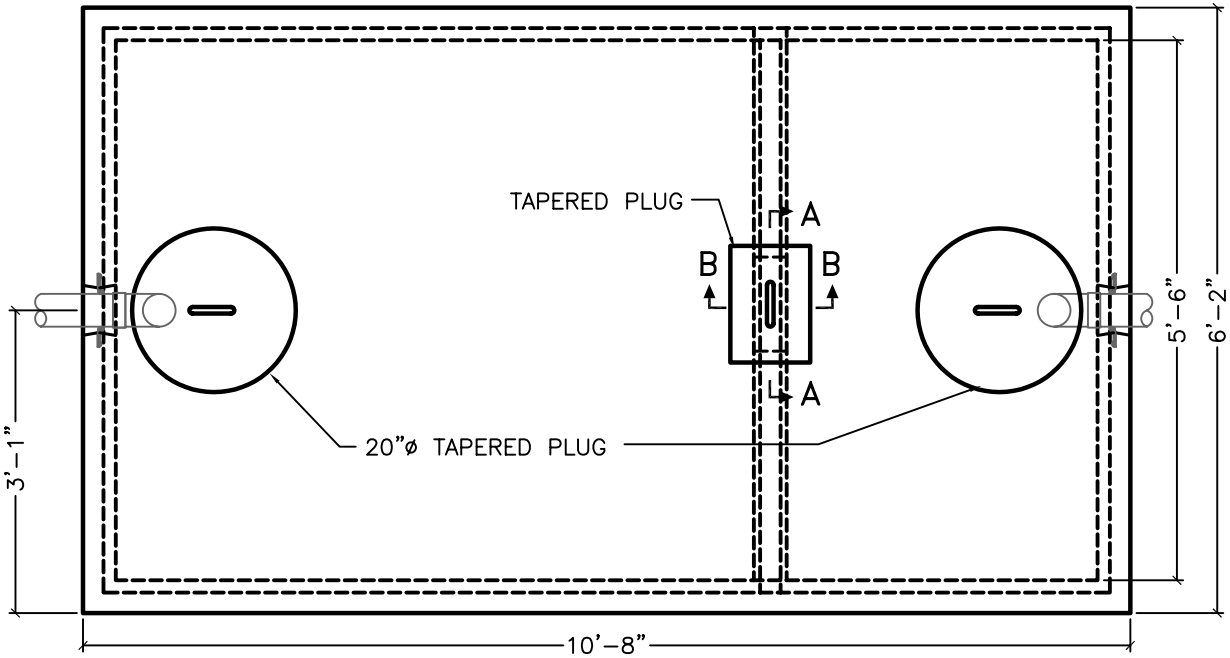

PLAN VIEW

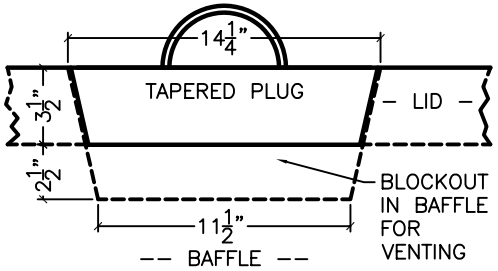

SECTION A–A

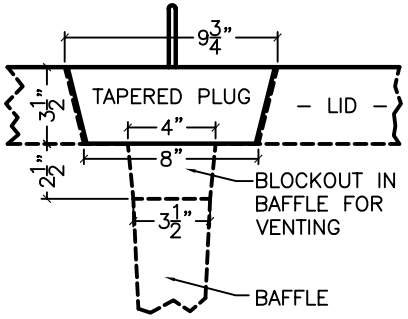

SECTION B–B

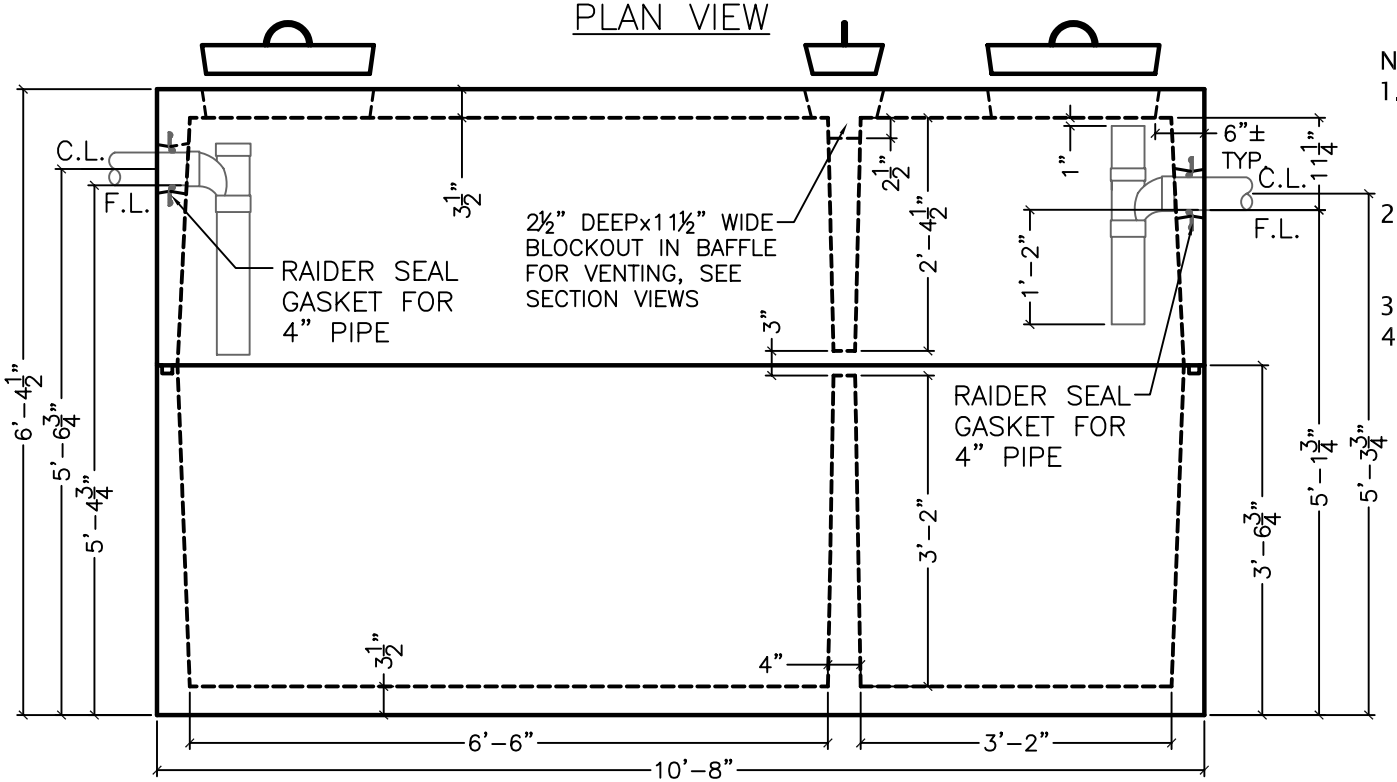

SECTION VIEW

NOTES:

1. SECONDARY COMPARTMENT HAS VOLUME EQUAL TO APPROXIMATELY 1/3 OF TOTAL CAPACITY
2. ALL WALLS ARE TAPERED FROM 4" WIDE AT THE BOTTOM AND 2-1/2" WIDE AT THE JOINT.
3. FLOOR THICKNESS IS 3-1/2"
4. REQUIRED HOLE SIZE: 13'-0"x8'-6"

WEIGHT / CONCRETE:
13,939 LBS / 3.44 CY

01/04/08

ITEM NAME:

2000 GALLON SEPTIC TANK

COLORADO PRECAST CONCRETE, Inc.
1820 E. HIGHWAY 402, LOVELAND, CO 80537
(970) 669-0535 FAX (970) 669-0674
www.coloprecast.com

NPCA Precast... The Concrete Solution CERTIFIED PLANT

THIS DOCUMENT IS THE PROPERTY OF COLORADO PRECAST CONCRETE, INC. (C.P.C.) AND IS TO BE USED FOR REFERENCE ONLY. IT SHALL NOT BE REPRODUCED IN ANY WAY HARMFUL TO THE INTERESTS OF C.P.C.